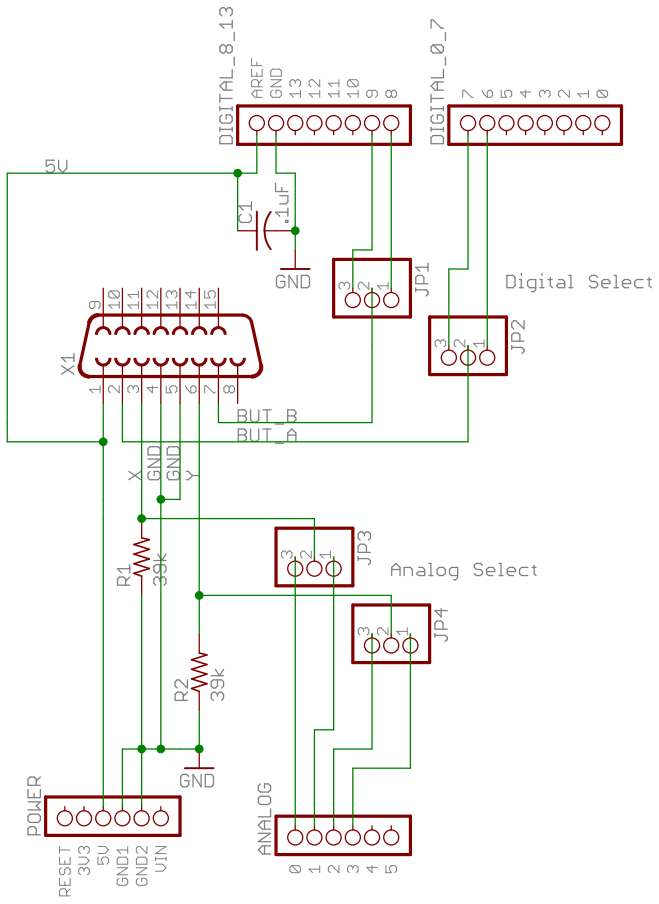

TITLE: Joystick Shield

Document Number:

REV: 1.1

Date: 1/22/2014 12:04:16 AM

Sheet: 1/1